# 1T9913DA | FORTYEIGHT Label 6 - Suspension
## Professional low voltage LED fixture for direct lighting

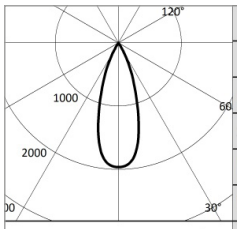


| 3000K | | H(m) | D(m) | Emax(lx) |
|---|---|---|---|---|
| Ra90 | | | 35° | |
| Fixture Power | 9W | 1 | 0.63 | 2316 |
| Source Flux | 1182lm | 2 | 1.26 | 579 |
| Fixture Flux | 865lm | 3 | 1.89 | 257 |
| Efficacy | 96lm/W | 4 | 2.51 | 145 |
| TS1989 Imax=1959cd/klm | Imax | 2316cd | 5 | 3.14 | 93 |

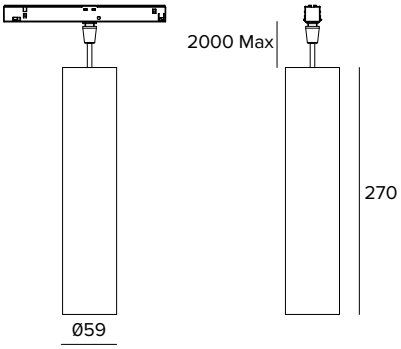


The figures on the drawing are expressed in mm.

### SOURCE

High efficiency Chip on Board LED Ra90. 3500K on request.
**Energy efficiency class:** D
**Nominal power:** 8,3W
**Nominal flux:** 1182lm
**Colour rendering index:** 90
**Rf:** 92
**Rg:** 101
**CCT nominal:** 3000K
**SDCM:** 1.5
**Lifetime (L80/B10):** >50000h tq +25°C

### ILLUMINOTECHNICAL CHARACTERISTICS

FL version - convex faceted highly reflective anodised aluminium precision optics, holographic diffusion filter and black silicone cut off ring.
**Optic:** REFLECTOR
**Beam angles:** FL
**Optical efficiency:** 73%
**Fixture flux:** 865lm
**Luminous efficacy:** 96lm/W
**Photobiological safety:** Compliant with RG1 low risk group

### MECHANICAL CHARACTERISTICS

Cylindrical body in aluminum obtained from an extrusion process and coated with powder paint.
**Colour and finish:** Deep black
**Dimensions:** D=59mm
**Weight:** 0.7Kg
**Version:** DALI
**Degree of protection:** IP20

### ELECTRICAL CHARACTERISTICS

DALI version, track power supply. Casambi control system available using a dedicated accessory.
**Fixture Power:** 9W
**Power supply:** 48Vdc
**Insulation Class:** CLASS 3
**Class F:** YES
**SAFE FLICKER:** PstLM=<1 and SVM=<0.4 (IEC TR 61547-1 and IEC TR 63158), to ensure a more comfortable and safe light
**Ambient temperature:** 0°C / +25°C

### INSTALLATION

Complete with 2000mm long multicore suspension cable in coloured fabric with lenght adjustment system. Black feeding cable. Quick coupling system for mounting the product on the track.

### NOTES

Not polarized fixture. Black adapter. 110-277Vac version available on request. Commissioning of the control system via free APP; the intervention of a specialist technician can be quoted on request.

### WARRANTY

5 years.

### WARNING

Luminaire designed for disposal/recycling at end-of-life. Replaceable (LED only) light source by a professional. Replaceable control gear by a professional.

*Due to the technological evolution of the electronic components, the data provided may be updated, and as such, confirmation must be requested during the order process.*
*Luminous flux and power supply have +/-10% tolerances with respect to the indicated value. tq +25°C (CIE 121).*

*We reserve the right to make technical changes.*

*Targetti Sankey S.r.l.*
*Via Pratese, 164*
*50145 Firenze - Italy*
*Tel: +39 055 37911*
*targetti.com*
*targetti@targetti.com*

*CCIAA Firenze*
*Share Capital:*
*€ 500.000,00*
*VAT N. (IT):*
*01537660480*
*R.E.A: FI-275656*

TARGETTI